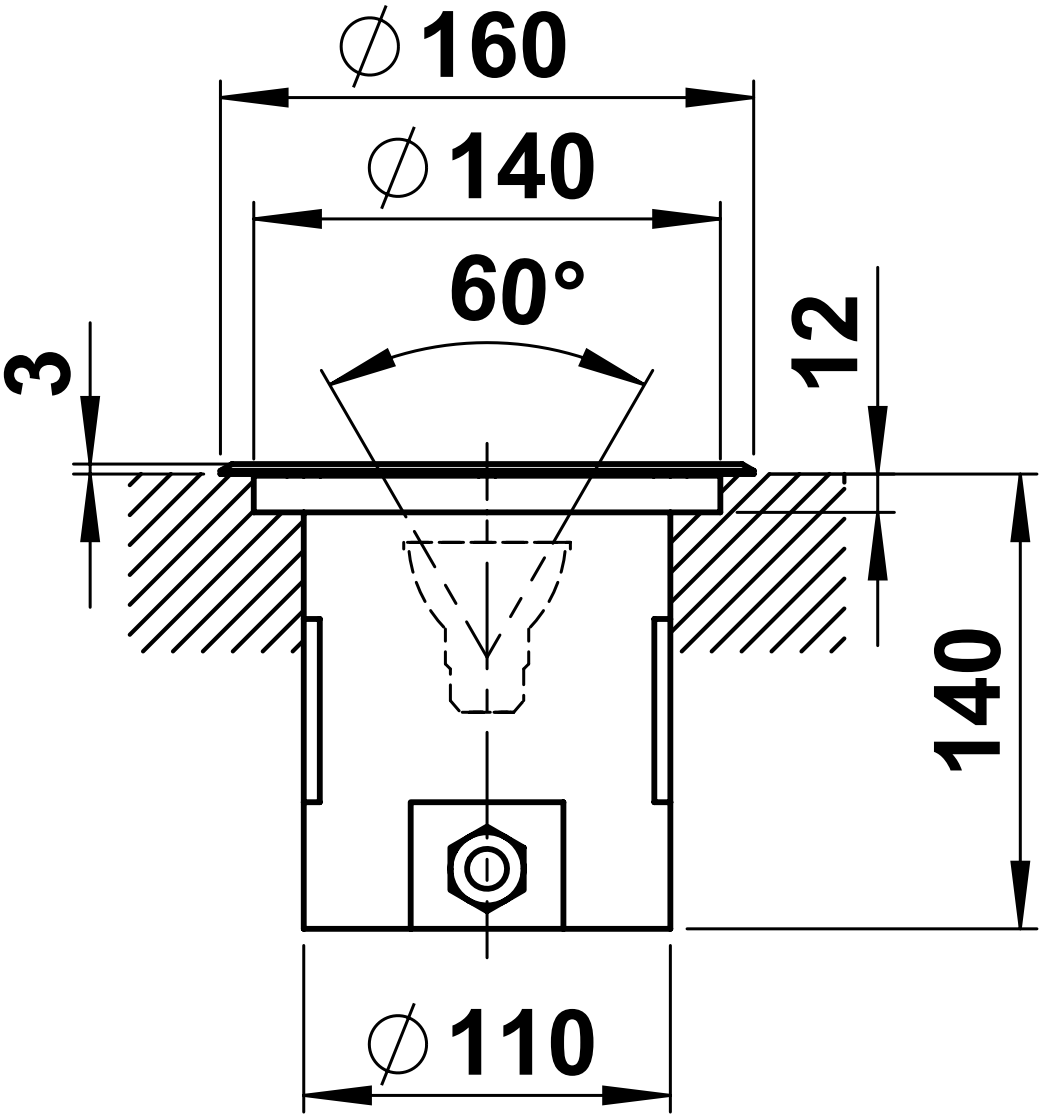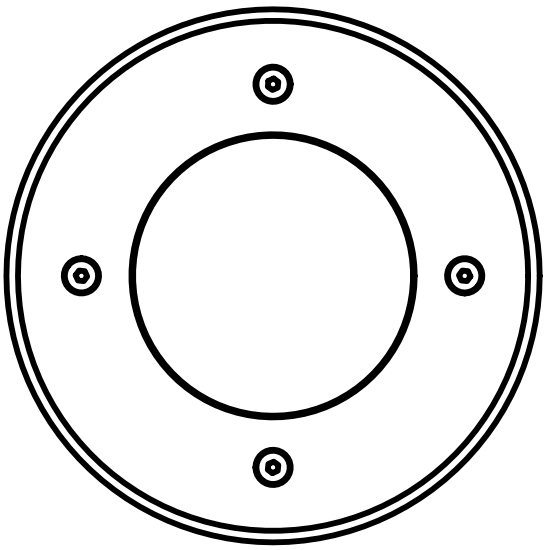
∅160
∅140
60°
3
12
140
∅110