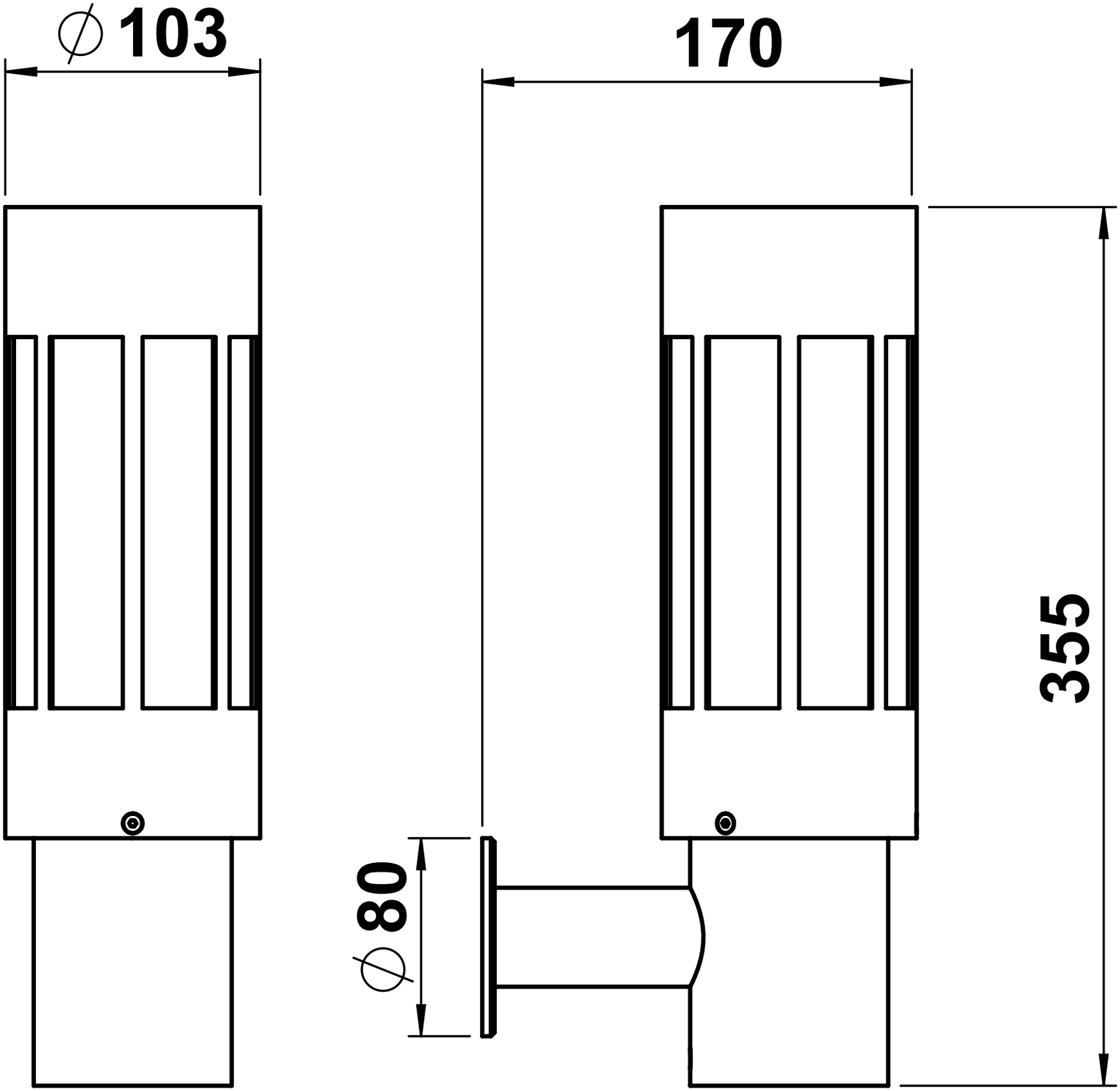
∅103
170
355
∅80