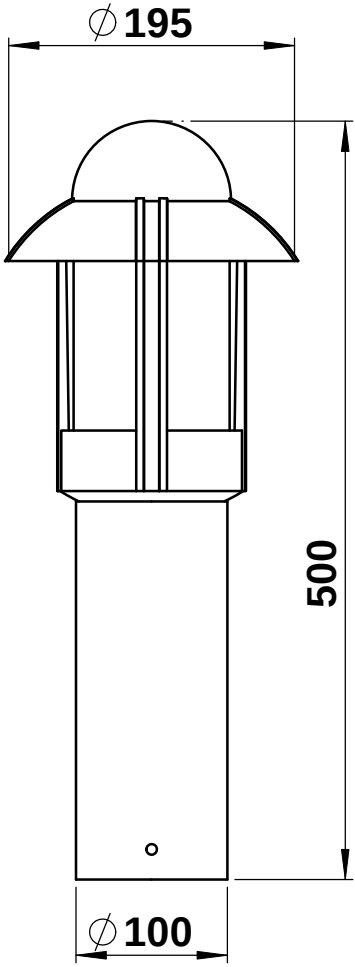
∅195
500
∅100