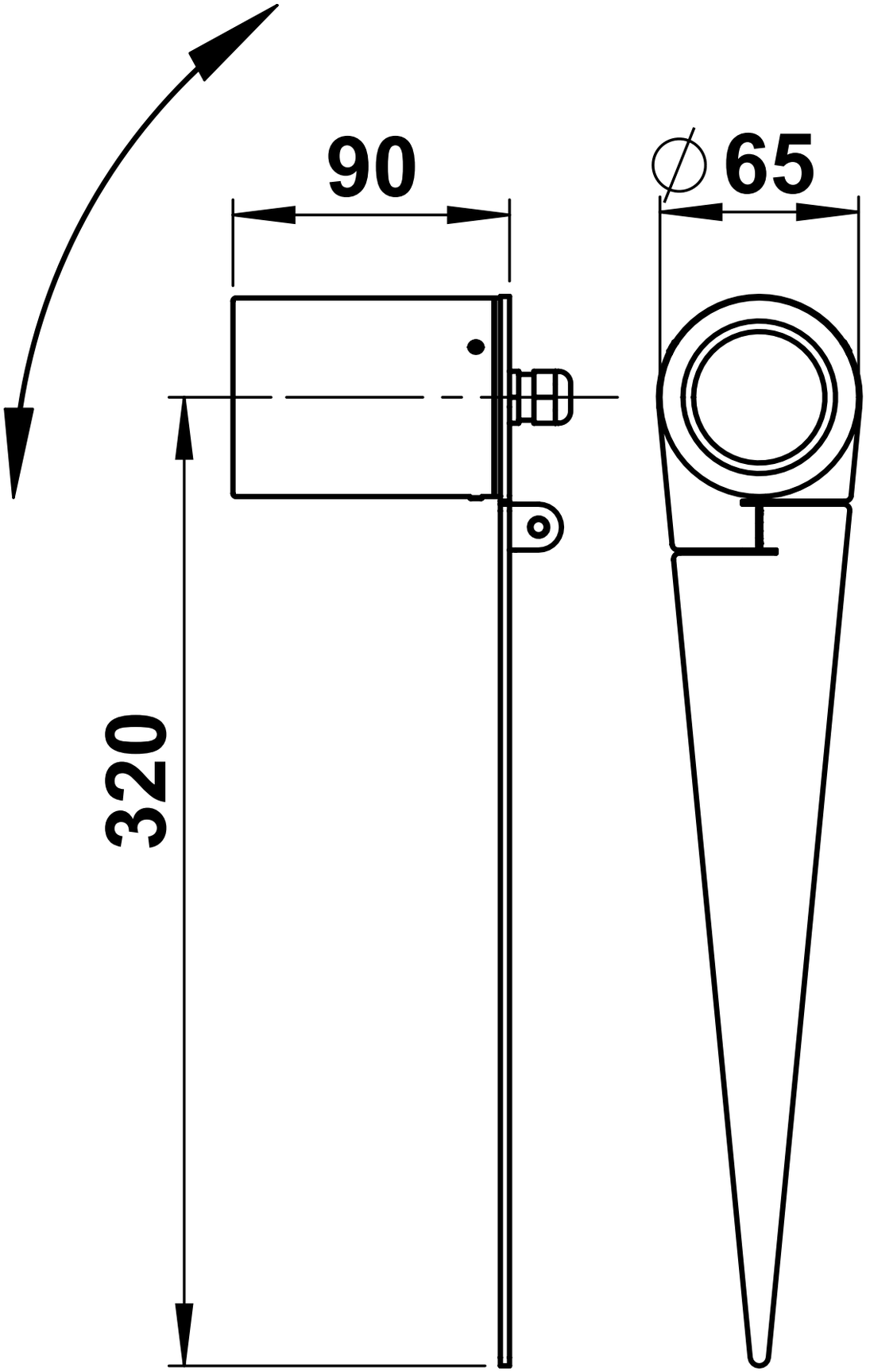
90
∅ 65
320